ZCU106 Restoring Flash Contents

June 2018

XILINX

XTP496

Revision History

Date	Version	Description
06/18/18	3.0	Updated for 2018.2
05/07/18	2.0	Updated for 2018.1.
12/20/17	1.0	Initial version.

© Copyright 2018 Xilinx, Inc. Xilinx, the Xilinx logo, Artix, ISE, Kintex, Spartan, Virtex, Vivado, Zynq, and other designated brands included herein are trademarks of Xilinx in the United States and other countries. All other trademarks are the property of their respective owners.

NOTICE OF DISCLAIMER: The information disclosed to you hereunder (the "Information") is provided "AS-IS" with no warranty of any kind, express or implied. Xilinx does not assume any liability arising from your use of the Information. You are responsible for obtaining any rights you may require for your use of this Information. Xilinx reserves the right to make changes, at any time, to the Information without notice and at its sole discretion. Xilinx assumes no obligation to correct any errors contained in the Information or to advise you of any corrections or updates. Xilinx expressly disclaims any liability in connection with technical support or assistance that may be provided to you in connection with the Information. XILINX MAKES NO OTHER WARRANTIES, WHETHER EXPRESS, IMPLIED, OR STATUTORY, REGARDING THE INFORMATION, INCLUDING ANY WARRANTIES OF MERCHANTABILITY, FITNESS FOR A PARTICULAR PURPOSE, OR NONINFRINGEMENT OF THIRD-PARTY RIGHTS.

Overview

- Xilinx ZCU106 Board
- Software Requirements
- ZCU106 Setup
- Restoring ZCU106 Dual MT25QU512 SPI Flash
- References

Note: This presentation applies to the ZCU106

ZCU106 Restoring Flash Contents Description

- **Description**
  - Vivado is used to restore the onboard non-volatile memories for the Dual MT25QU512 QSPI Flash
- **Reference Design Source and Applications**
- **Files for Flash Restoration**
  - RDF0451 - ZCU106 Restoring Flash Design Files (2018.2 C) ZIP file

Note: Presentation applies to the ZCU106

Xilinx ZCU106 Board

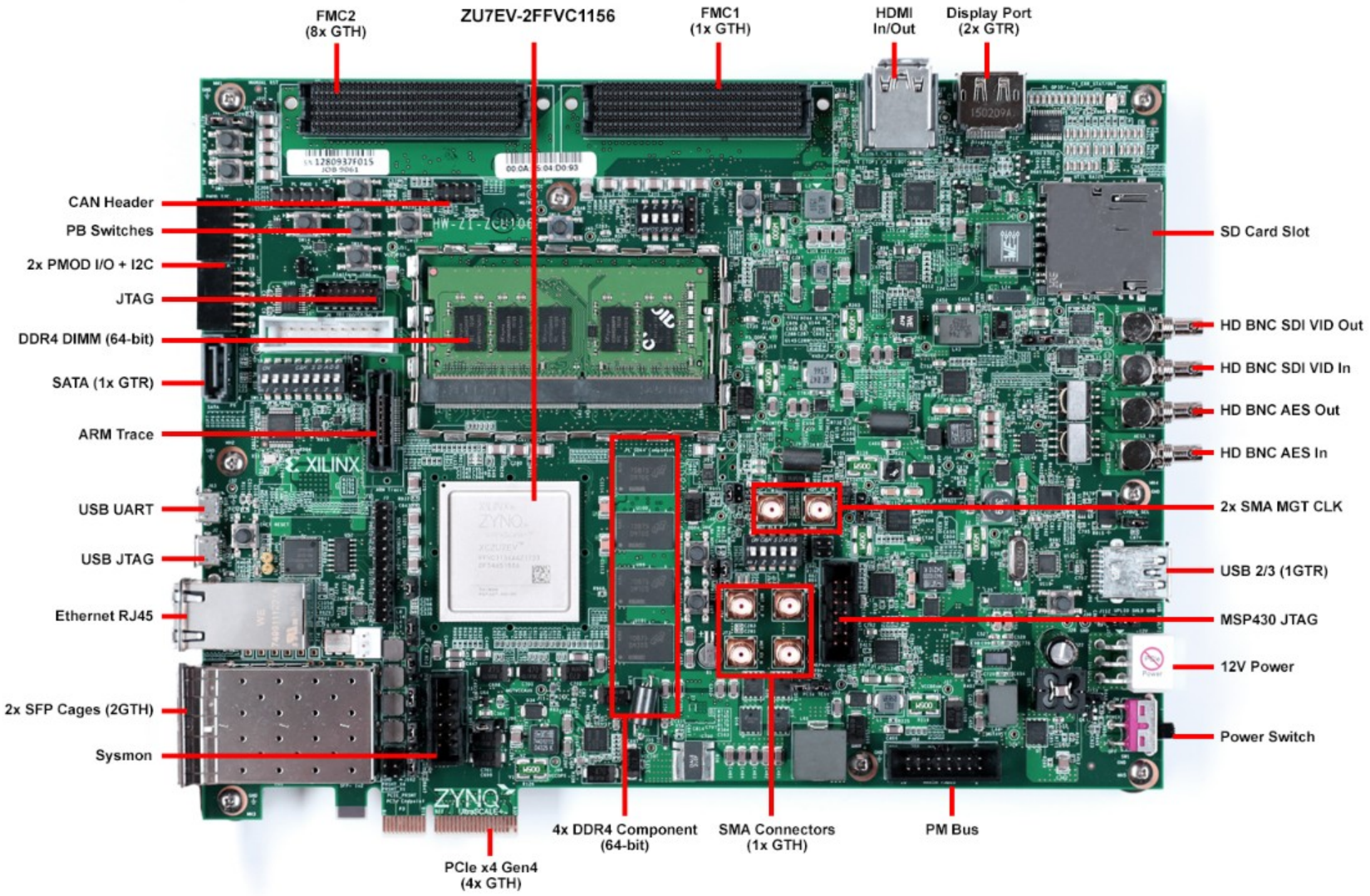

Note: Presentation applies to the ZCU106

ZCU106 Software Install and Board Setup

- **Refer to XTP497 – ZCU106 Software Install and Board Setup for details on:**
  - Software Requirements
  - ZCU106 Board Setup
  - UART Driver Install
  - Ethernet Setup
  - Optional Hardware Setup

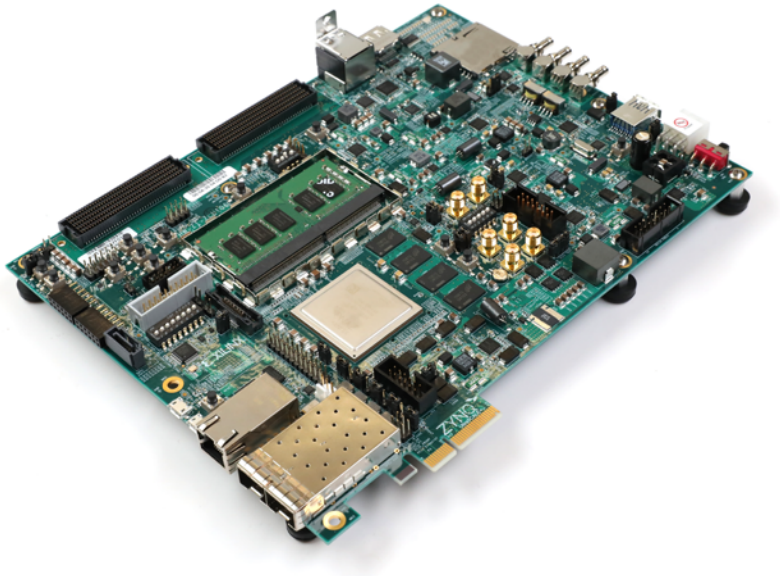

Note: Presentation applies to the ZCU106

Restoring ZCU106 Dual MT25QU512 SPI Flash

Restoring ZCU106 Dual MT25QU512 SPI Flash

- **Unzip the RDF0451 - ZCU106 Restoring Flash Design Files (2018.2 C) ZIP file to your C:\ drive**
  - Available through http://www.xilinx.com/zcu106

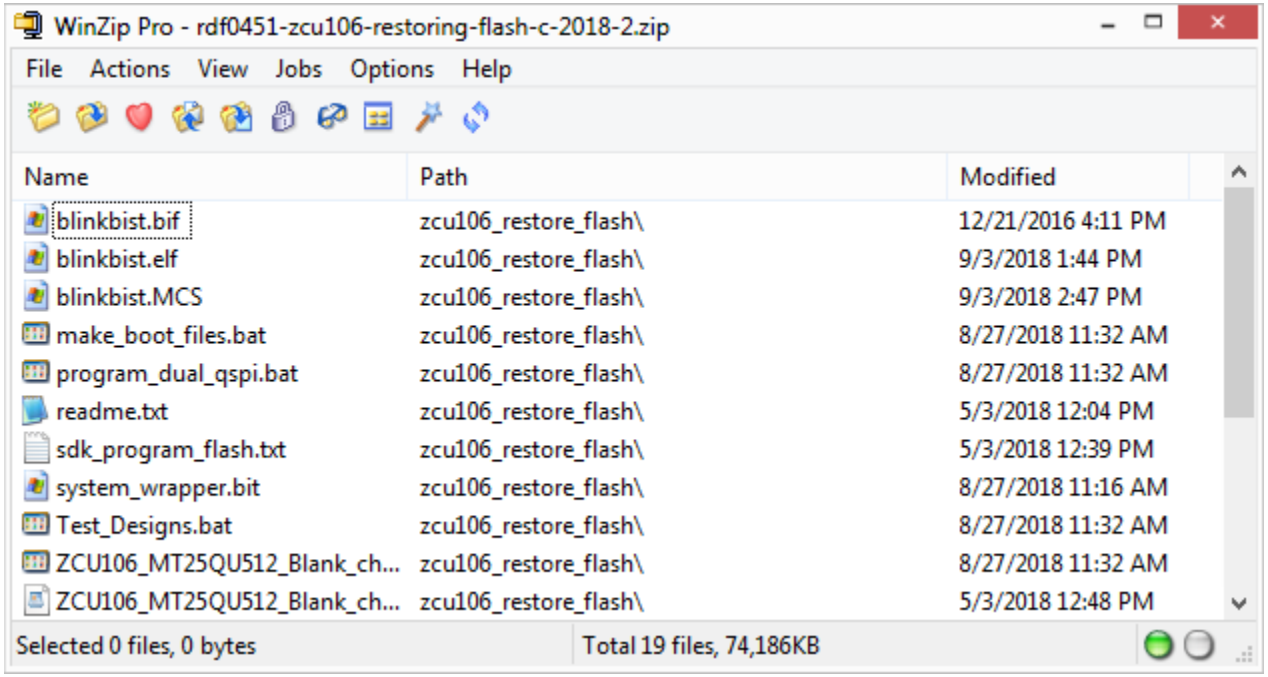

Note: Presentation applies to the ZCU106

Restoring ZCU106 Dual MT25QU512 QSPI Flash

- **Set S6 to 1111 (1 = GND, Position 1 → Position 4)**
  - This allows programming the QSPI Flash

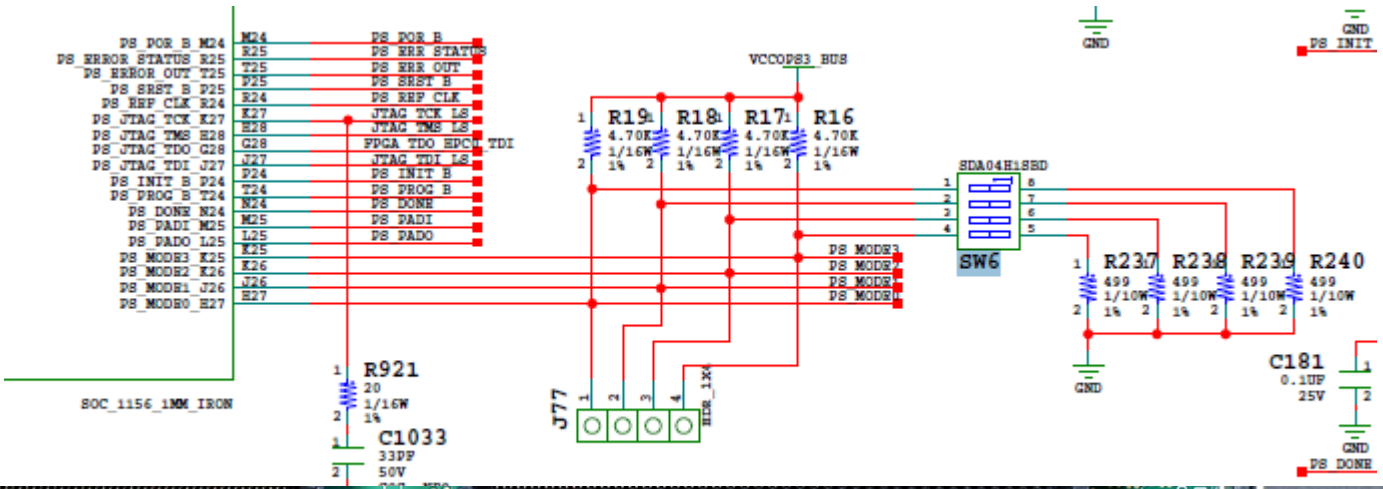

Restoring ZCU106 Dual MT25QU512 QSPI Flash

- **Open a Vivado Tcl Shell:**

  Start → All Programs → Xilinx Design Tools → Vivado 2018.2 → Vivado 2018.2 Tcl Shell

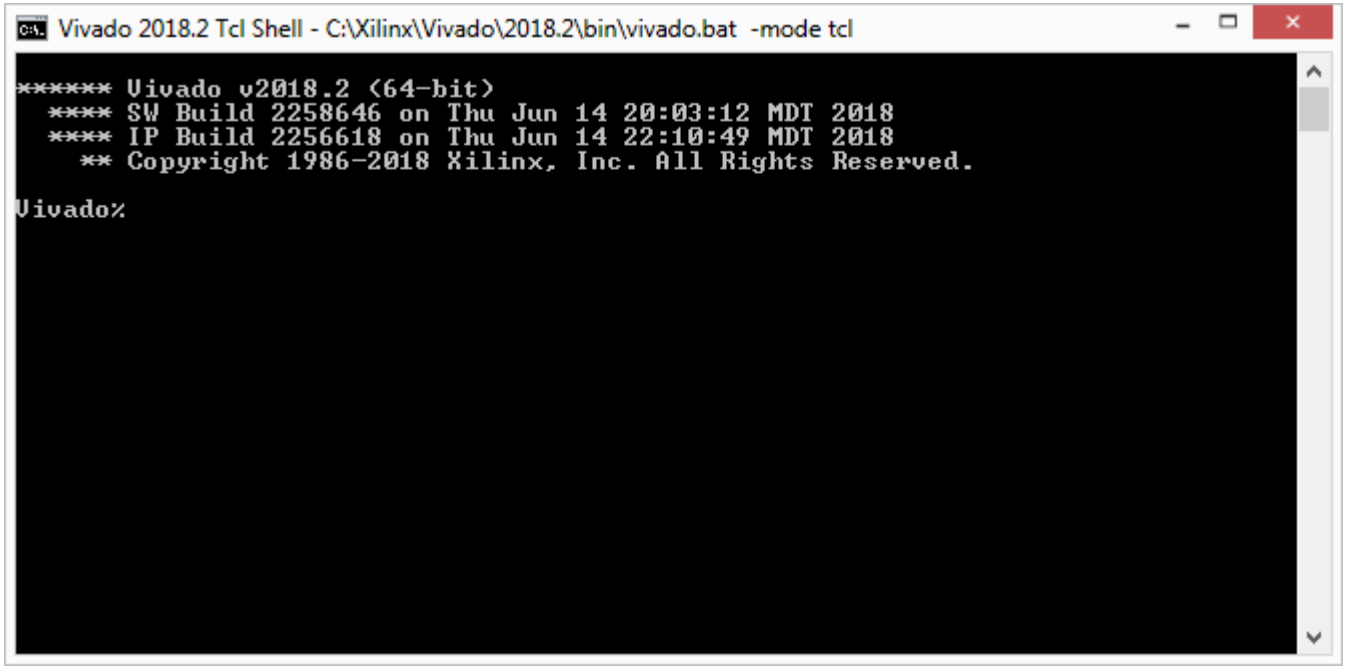

Note: Presentation applies to the ZCU106

Restoring ZCU106 Dual MT25QU512 QSPI Flash

- **In the Vivado Tcl Shell type:**

  cd C:/zcu106_restore_flash

  source zcu106_program_qspi.tcl

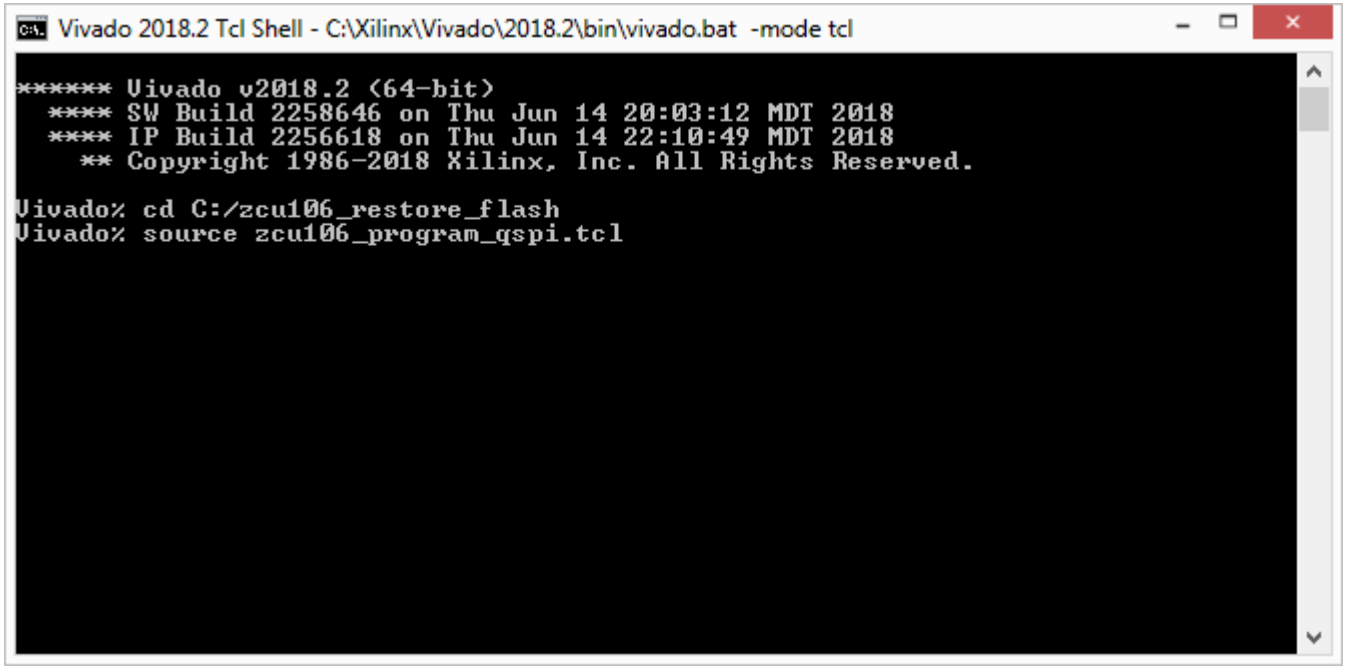

Note: Takes about 7 minutes

Restoring ZCU106 Dual MT25QU512 QSPI Flash

- **Operation complete, Dual QSPI Flash verified**

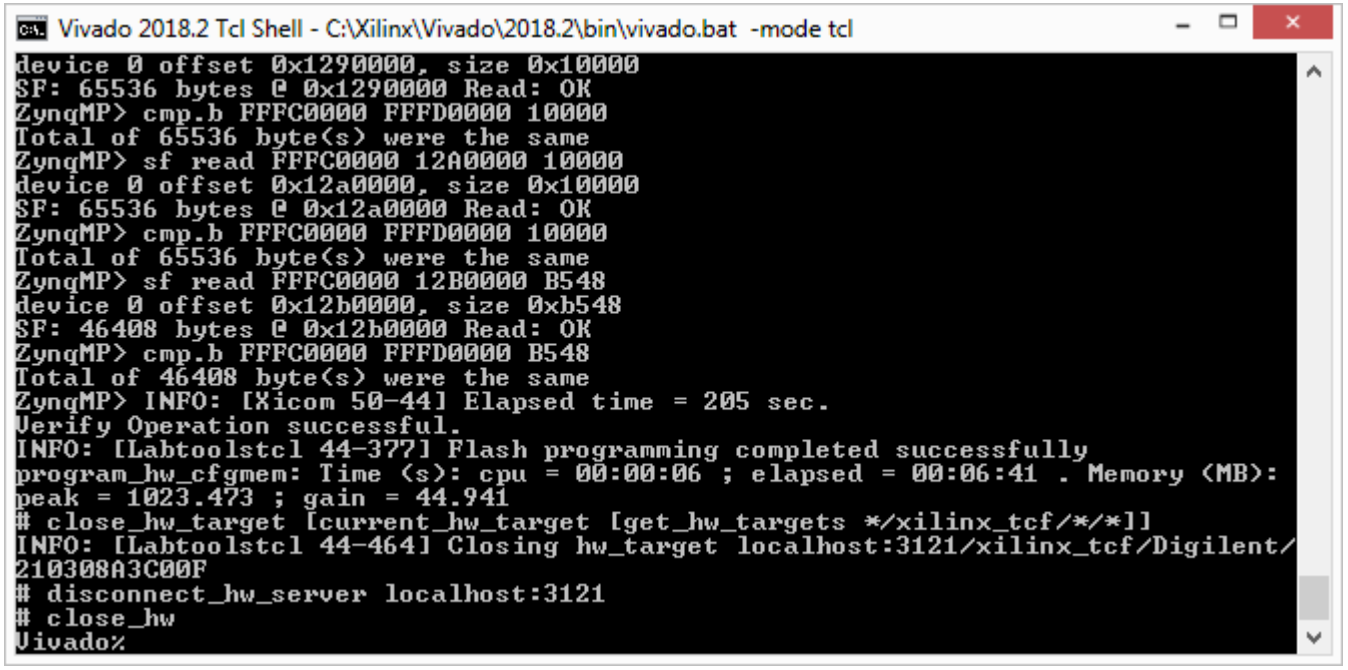

Note: Presentation applies to the ZCU106

Restoring ZCU106 Dual MT25QU512 QSPI Flash

- **Set S6 to 1011 (1 = GND, Position 1 → Position 4)**
  - This sets the Boot Mode to 0x0100, QSPI32 as per UG1085

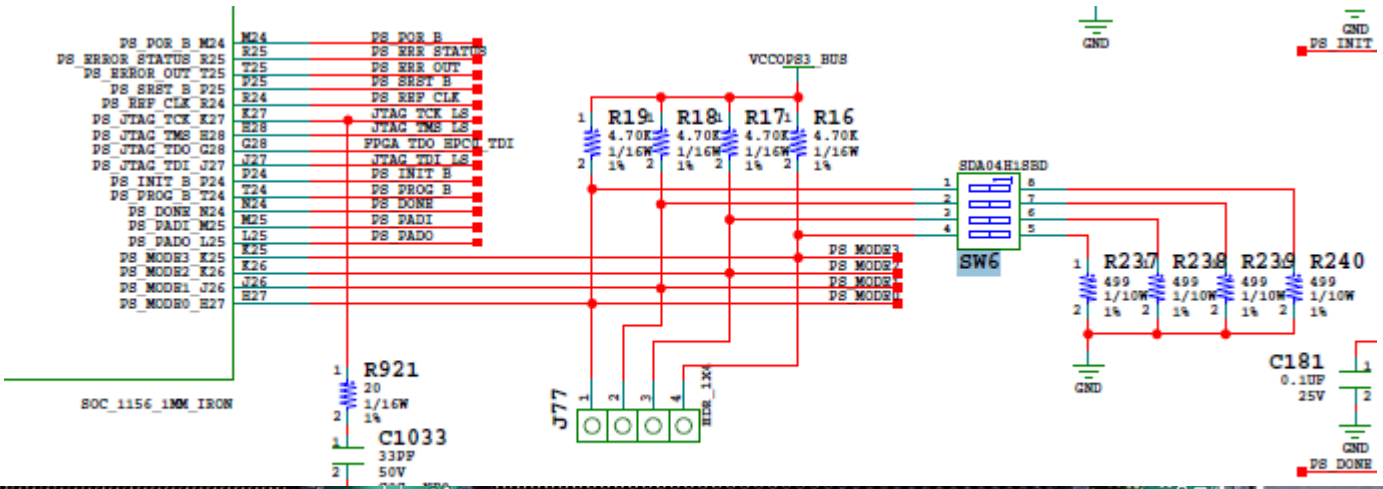

Restoring ZCU106 Dual MT25QU512 QSPI Flash

- Cycle power, and the BIST program begins running
- Follow the steps in the UG426, ZCU106 Quick Start Guide

STEP 4: Run the Built-In Self-Test

The BIST consists of a set of pass/fail tests that run sequentially. As each test passes, its corresponding LED glows green. If a test fails, its corresponding LED is off. The flashing LEDs are next to SW13. For SW13, up is ON or 1.

Note: To pass the PL DIP test, all the switches in SW13 must be up before any of them are moved down. The LEDs flash faster after you begin the DIP or pushbutton (PB) test.

- The Clock, BRAM, PL-DDR4, PS-DDR4, Flash, and I2C tests run without user input.
- The DIP switch test (SW13) waits for you to move all the DIP switches toward the label ON, and then back.
- The PB test waits for you to push all the pushbuttons. The N, W, S, and E pushbuttons can be pushed in any order, but push the center button (SW15) last.
- The LED for the test that is waiting for your input slowly flashes on and off.

Self-Test Assignments for PL LEDs

MSB→LSB							
7	6	5	4	3	2	1	0
Clock	BRAM	PL-DDR4	PS-DDR4	Flash	I2C	DIP	PB

Note: Presentation applies to the ZCU106

Restoring ZCU106 Dual MT25QU512 QSPI Flash

- **Once the Quick Start Guide steps are complete, you can view the IPI App in UART0 window**

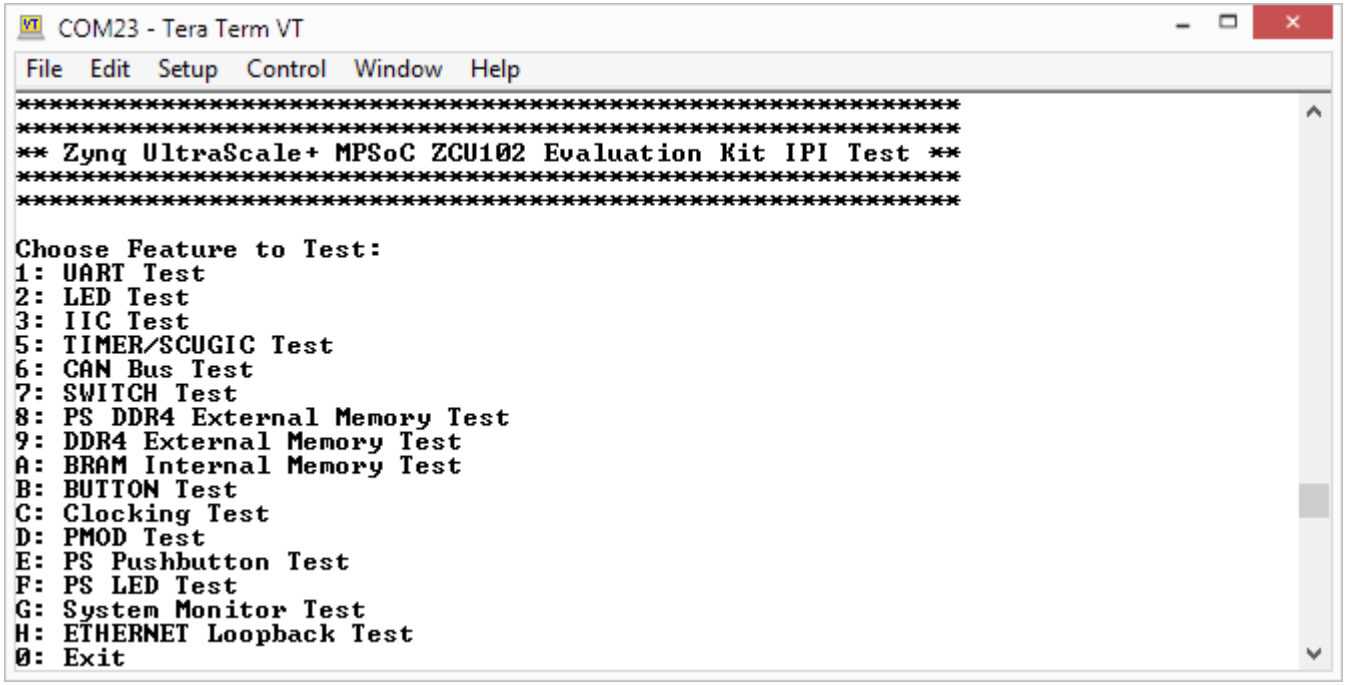

Note: Presentation applies to the ZCU106

Restoring ZCU106 Dual MT25QU512 SPI Flash

- **Review XTP493 for more details on the ZCU106 IPI Design**

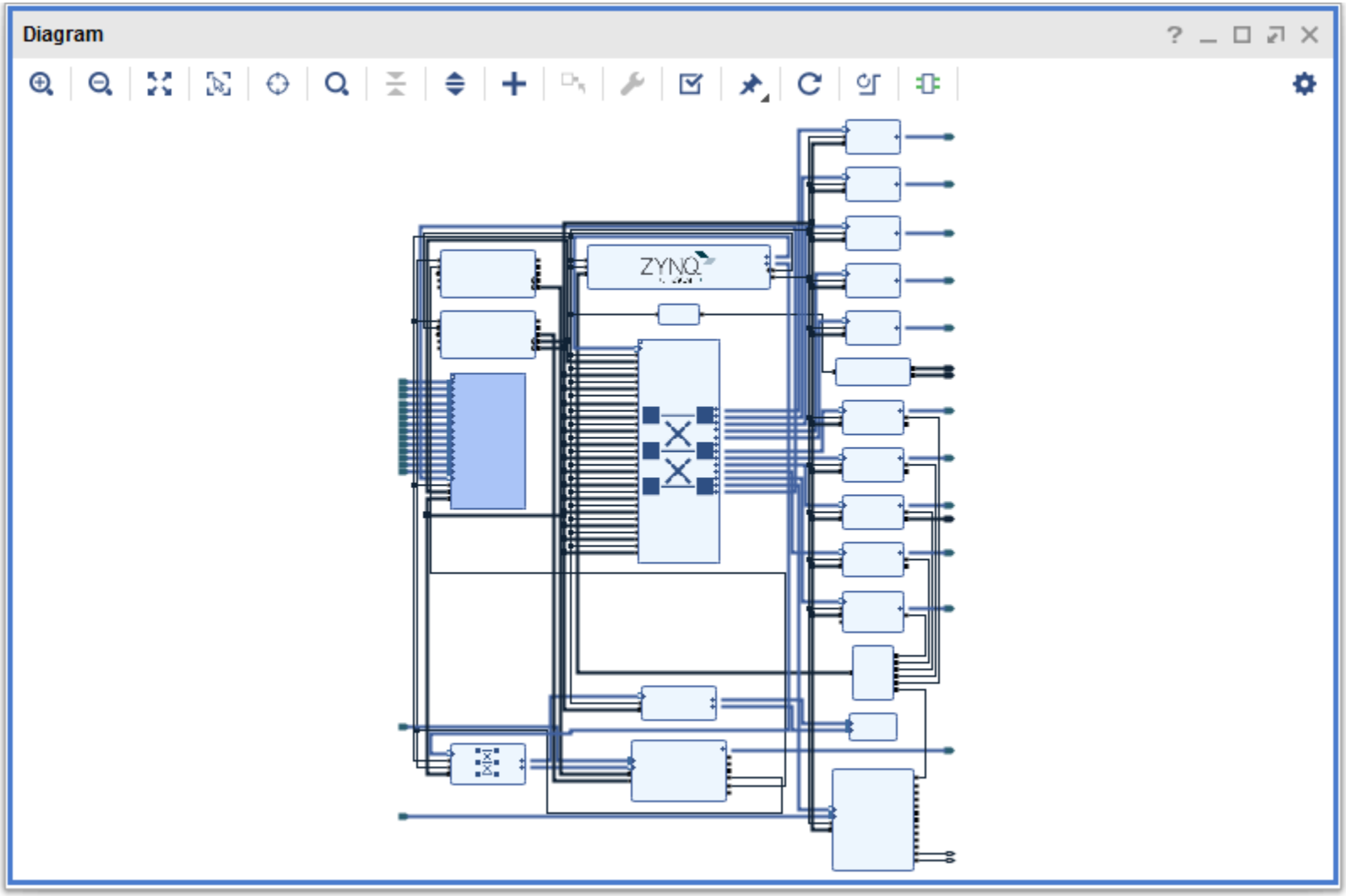

Note: Presentation applies to the ZCU106

References

References

- **Micron NOR Flash**
  - Micron MT25QU512 Flash
    - https://www.micron.com/products/nor-flash/serial-nor-flash
  - Datasheet
    - https://www.micron.com/~/media/documents/products/data-sheet/nor-flash/serial-nor/mt25q/die-rev-b/mt25q_qlkt_u_512_abb_0.pdf
- **Xilinx UltraScale Configuration with SPI Flash**
  - UltraScale FPGAs Configuration User Guide – UG570
    - https://www.xilinx.com/support/documentation/user_guides/ug570-ultrascale-configuration.pdf
  - UltraFast Design Methodology Guide for the Vivado Design Suite – UG949
    - https://www.xilinx.com/support/documentation/sw_manuals/xilinx2018_2/ug949-vivado-design-methodology.pdf
  - Vivado Design Suite Programming and Debugging User Guide – UG908
    - https://www.xilinx.com/support/documentation/sw_manuals/xilinx2018_2/ug908-vivado-programming-debugging.pdf

References

- **Vivado Release Notes**
  - Vivado Design Suite User Guide - Release Notes – UG973
    - https://www.xilinx.com/support/documentation/sw_manuals/xilinx2018_2/ug973-vivado-release-notes-install-license.pdf
  - Vivado Design Suite 2018 - Vivado Known Issues
    - https://www.xilinx.com/support/answers/70860.html

Documentation

Documentation

- **Zynq UltraScale+**
  - Zynq UltraScale+ MPSoC
    - http://www.xilinx.com/products/silicon-devices/soc/zynq-ultrascale-mpsoc.html
- **ZCU106 Documentation**
  - Xilinx Zynq UltraScale+ MPSoC ZCU106 Evaluation Kit
    - https://www.xilinx.com/products/boards-and-kits/zcu106.html
  - ZCU106 Board User Guide – UG1244
    - https://www.xilinx.com/support/documentation/boards_and_kits/zcu106/ug1244-zcu106-eval-bd.pdf
  - ZCU106 Evaluation Kit Quick Start Guide User Guide – XTP472
    - https://www.xilinx.com/support/documentation/boards_and_kits/zcu106/xtp472-zcu106-quickstart.pdf